Performance Analysis of 5G New Radio (5G NR) Transmitter Models Using QAM Modulation Scheme

Submitted in partial fulfillment of the requirements for the degree of

Bachelor of Technology

In

Electronics and Communication Engineering

By

PRARTHNA PUHAN
22BEC0075

Under the guidance of

Dr. Shambavi K.

School of Electronics Engineering
VIT, Vellore.

April, 2026

DECLARATION

I hereby declare that the thesis entitled "Performance Analysis of 5G New Radio (5G NR) Transmitter Models Using QAM Modulation Schemes" submitted by me, for the award of the degree of *Bachelor of Technology in Electronics and Communication Engineering* to VIT is a record of bonafide work carried out by me under the supervision of Dr. Shambavi K.

I further declare that the work reported in this thesis has not been submitted previously to this institute or anywhere for the consideration of the degree/diploma.

Place: Vellore

Date: 16/04/26

Signature of the Candidate

CERTIFICATE

This is to certify that the thesis entitled "Performance Analysis of 5G New Radio (5G NR) Transmitter Models Using QAM Modulation Schemes" submitted by **Prarthna Puhan (Registration No.: 22BEC0075) and School of Electronics Engineering (SENSE)**, VIT, for the award of the degree of *Bachelor of Technology in Electronics and Communication Engineering*, is a record of bonafide work carried out by her under my supervision during the period, 09.07.2025 to 10.04.2026, as per the VIT code of academic and research ethics.

The contents of this report have not been submitted either in part or in full, for the award of any other degree or diploma in this institute orany other institute or university. The thesis fulfills the requirements and regulations of the University and in my opinion meets the necessary standards for submission.

Place : Vellore

Date : 16/04/2026 **Signature of the Guide**

Internal Examiner **External Examiner**

ACKNOWLEDGEMENTS

I would like to express my sincere gratitude to Dr. Shambavi K., School of Electronics Engineering, VIT, Vellore, for her constant guidance, encouragement, and valuable insights throughout the course of this project. Her expertise and support were instrumental in the successful completion of this work.

I am also thankful to the faculty and staff of the School of Electronics Engineering (SENSE) for their continuous support and for providing the resources and technical assistance required for this project.

I would like to extend my appreciation to Vellore Institute of Technology (VIT) for offering an excellent academic environment and infrastructure that enabled me to carry out this research work efficiently.

Finally, I would like to thank my family and friends for their constant motivation, patience, and encouragement throughout this journey. Their support has been invaluable in helping me complete this project successfully.

Prarthna Puhan

Executive Summary

This thesis presents a comprehensive performance analysis of 5G New Radio (5G NR) transmitter models using 16-QAM, 64-QAM, and 256-QAM modulation schemes, implemented in MATLAB Simulink. The study evaluates system performance under ideal, impaired, and compensated conditions using key metrics such as Error Vector Magnitude (EVM), Peak-to-Average Power Ratio (PAPR), and constellation analysis.

Beyond baseline evaluation, the transmitter model incorporates realistic RF impairments including I/Q imbalance, phase noise, carrier frequency offset (CFO), power amplifier nonlinearity, and multipath fading (Rayleigh and Rician), along with AWGN. The results show that RF impairments, especially CFO and oscillator-related effects, have a significantly greater impact on system performance than channel noise, particularly for higher-order modulation schemes.

To address these degradations, suppression and compensation blocks such as carrier synchronizers and LMS-based I/Q imbalance compensators are integrated into the model. These techniques reduce EVM and improve signal quality, although complete restoration to ideal conditions is not possible due to accumulated non-idealities.

Simulation results confirm that while 16-QAM offers higher robustness and 256-QAM provides greater spectral efficiency, 64-QAM achieves the best trade-off between performance, efficiency, and resilience under practical RF impairment conditions. The study validates the reliability of the developed transmitter model and highlights the importance of impairment-aware design in modern 5G NR systems.

TABLE OF CONTENTS

	CONTENTS	Page No.
	Declaration	ii
	Certificate	iii
	Acknowledgements	iv
	Executive Summary	v
	Table of Contents	vi
	List of Figures	vii
	List of Tables	vii
	List of Abbreviations	viii
1	**INTRODUCTION**	**1**
	1.1 Literature Review	2
	1.2 Research Gaps	3
	1.3 Problem Statement	3
2	**RESEARCH OBJECTIVE**	**4**
3	**Relevance of Problem Statement w.r.t. SDGs**	**4**
4	**PROPOSED SYSTEM**	**5**
	4.1 Design Approach	5
	4.2 Codes and Standards	6
	4.3 Constraints, Alternatives and Trade-offs	7
5	**PROJECT DESCRIPTION**	**8**
	5.1 System Overview	8
	5.2 Ideal Transmitter Model	9
	5.3 Impairment-Aware Transmitter Model	11
	5.4 Transmitter with Suppression and Compensation	13
	5.5 Comparative Modulation Analysis	15
6	**HARDWARE / SOFTWARE TOOLS USED**	**16**
7	**SCHEDULE AND MILESTONES**	**16**
8	**RESULT ANALYSIS**	**17**
9	**CONCLUSION**	**18**
	9.1 Obtained Results	18
	9.2 Future Work	18
	9.3 Individual Contribution	19
10	**SOCIAL AND ENVIRONMENTAL IMPACT**	**19**
11	**COST ANALYSIS**	**20**
12	**PROJECT OUTCOME / PUBLICATION / PATENT**	**20**
13	**REFERENCES**	**21**

APPENDIX A

List of Figures

Figure No.	Title	Page No.
1	Design Flow of the Proposed 5G NR Transmitter System	6
2	System-Level Flow of NR RF Transmitter Modelling and Analysis	8
3	Base 5G NR Transmitter Model	9
4	Baseband and RF Transmission Waveforms	10
5	Receiver Spectrum and CCDF Curve	10
6	Ideal Case Constellation Diagrams of 16, 64 and 256-QAM	11
7	5G NR Transmitter Block with Impairments Blocks	12
8	5G NR Transmitter Block with Impairments and Suppression Blocks	14
9	Constellation Diagrams of 16, 64 and 256-QAM after applying suppression and compensation	15

List of Tables

Table No.	Title	Page No.
1	QAM Performance Comparison for Ideal Case	11
2	Major RF Impairments on 64-QAM	13
3	Effect of Suppression and Compensation (64-QAM)	13
4	Comparative Modulation Performance	15

List of Abbreviations

3GPP	3rd Generation Partnership Project
4G	Fourth Generation
5G NR	Fifth Generation New Radio
AWGN	Additive White Gaussian Noise
BW	Bandwidth
CCDF	Complementary Cumulative Distribution Function
CFO	Carrier Frequency Offset
SCS	Subcarrier Spacing
DPD	Digital Pre-distortion
EVM	Error Vector Magnitude
FIR	Finite Impulse Response
FR1	Frequency Range 1
I/Q	In-phase / Quadrature
LMS	Least Mean Squares
LTE	Long Term Evolution
MIMO	Multiple Input Multiple Output
OFDM	Orthogonal Frequency Division Multiplexing
PA	Power Amplifier
PAPR	Peak-to-Average Power Ratio
QAM	Quadrature Amplitude Modulation
RF	Radio Frequency
SDGs	Sustainable Development Goals
SDR	Software Defined Radio
Tx	Transmitter

1. INTRODUCTION

Modern wireless communication systems such as 4G LTE and 5G New Radio (5G NR) are designed to support high data rates, low latency, and efficient spectrum utilization. To achieve these requirements, higher-order modulation techniques such as 16-QAM, 64-QAM, and 256-QAM are widely adopted due to their ability to transmit more bits per symbol, thereby improving spectral efficiency. However, increasing the modulation order also makes the system more sensitive to noise, channel variations, and hardware imperfections.

In practical transmitter implementations, ideal conditions rarely exist. Various radio frequency (RF) impairments such as I/Q imbalance, phase noise, carrier frequency offset (CFO), and power amplifier nonlinearity distort the transmitted signal and degrade overall system performance. These impairments lead to constellation distortion, increased Error Vector Magnitude (EVM), and reduced signal quality, particularly in higher-order QAM schemes. In addition, channel effects such as multipath fading and additive white Gaussian noise (AWGN) further influence system behaviour, though their impact is often less dominant compared to RF front-end non-idealities.

To address these challenges, modern communication systems incorporate suppression and compensation techniques such as carrier synchronization and I/Q imbalance correction. While these methods improve signal integrity, they cannot completely eliminate the effects of impairments, especially when multiple non-idealities occur simultaneously.

In this context, this work focuses on the simulation and performance evaluation of a 5G NR transmitter model developed in MATLAB Simulink. The study systematically analyses different QAM schemes under ideal, impaired, and compensated conditions using metrics such as EVM, PAPR, and constellation diagrams. The objective is to understand the impact of practical impairments and to identify the most suitable modulation scheme for reliable and efficient 5G NR communication.

1.1 LITERATURE REVIEW

Early studies on digital modulation and wireless communication systems established the fundamental performance limits of QAM in both ideal and fading environments. These works primarily focused on the trade-off between spectral efficiency and robustness, showing that higher-order modulation schemes improve data rates but are more susceptible to channel impairments [2]–[4]. Subsequent research extended this analysis to more realistic fading conditions such as Rayleigh and Rician channels, highlighting that channel effects alone cannot fully explain performance degradation observed in practical systems [5], [14].

With the adoption of direct conversion architectures, I/Q imbalance emerged as a critical impairment in multicarrier systems. Several studies investigated its impact on OFDM-based QAM systems and proposed compensation techniques using adaptive filtering and statistical estimation [6], [15]. Blind estimation methods were later introduced to eliminate the need for training sequences, offering flexibility at the expense of slower convergence and residual errors [16]. Further advancements showed that joint transmitter–receiver compensation improves performance but does not completely eliminate mirror interference [8], [18].

Phase noise, originating from non-ideal oscillators, has also been extensively studied as a major source of distortion in higher-order QAM systems. Both analytical and simulation-based studies demonstrated its effects, including constellation rotation, spreading, and increased EVM, particularly in 64-QAM and 256-QAM systems [10], [11], [13]. Combined compensation techniques addressing both phase noise and I/Q imbalance were found to outperform individual correction methods, although with increased system complexity [7], [17], [21], [22].

Another significant source of degradation is power amplifier nonlinearity, which introduces distortion and spectral regrowth. To address this, digital predistortion techniques, particularly memory polynomial-based models, have been widely studied and validated for improving linearity, especially for 64-QAM signals [9], [19], [20]. More recent system-level studies have emphasized Error Vector Magnitude (EVM) as a key metric for evaluating overall RF system performance in modern 4G and 5G communication systems [11], [12].

1.2 RESEARCH GAPS

Although significant research has been carried out on RF impairments and their mitigation techniques, most studies focus on analysing individual impairments such as I/Q imbalance, phase noise, or power amplifier nonlinearity in isolation. This does not fully represent practical transmitter conditions, where multiple impairments coexist and interact simultaneously, leading to compounded degradation effects.

Additionally, existing works often evaluate compensation techniques independently, without assessing their combined effectiveness in a unified system. As a result, there is limited understanding of how suppression and compensation blocks perform under realistic scenarios involving multiple impairments.

Furthermore, comparative analysis across different QAM schemes under identical conditions is not widely explored. In particular, there is a lack of system-level evaluation that consistently compares 16-QAM, 64-QAM, and 256-QAM in terms of robustness, efficiency, and sensitivity to impairments within the same framework. This gap makes it difficult to determine the most practical modulation scheme for real-world 5G NR deployments.

1.3 PROBLEM STATEMENT

In practical 5G NR transmitter systems, RF impairments such as I/Q imbalance, phase noise, carrier frequency offset, and power amplifier nonlinearity significantly degrade signal quality, leading to increased Error Vector Magnitude and distorted constellation characteristics. These effects become more severe for higher-order modulation schemes, which are inherently more sensitive to imperfections.

While compensation techniques exist, their ability to mitigate impairments is limited, especially when multiple non-idealities occur simultaneously. This creates a challenge in maintaining acceptable performance levels while achieving high spectral efficiency.

Therefore, there is a need for a systematic evaluation of 5G NR transmitter performance that considers realistic RF impairments, their combined impact, and the effectiveness of suppression and compensation techniques, in order to identify a modulation scheme that balances performance, robustness, and efficiency.

2. RESEARCH OBJECTIVE

The primary objective of this work is to develop and analyse a 5G NR transmitter model that accurately reflects practical operating conditions and evaluates modulation performance under varying scenarios.

The specific objectives are:

- To design and implement a MATLAB Simulink-based 5G NR transmitter model supporting 16-QAM, 64-QAM, and 256-QAM modulation schemes.
- To evaluate baseline performance under ideal channel conditions using metrics such as EVM, PAPR, and constellation analysis.
- To model and analyse the impact of key RF impairments including I/Q imbalance, phase noise, carrier frequency offset, power amplifier nonlinearity, and multipath fading.
- To implement suppression and compensation techniques such as carrier synchronization and I/Q imbalance compensation, and assess their effectiveness in improving system performance.
- To perform a comparative analysis of modulation schemes under identical impaired and compensated conditions to determine the most suitable modulation technique for practical 5G NR systems.

3. RELEVANCE OF PROBLEM STATEMENT W.R.T. SUSTAINABLE DEVELOPMENT GOALS (SDGs)

This work is aligned with SDG 9: Industry, Innovation and Infrastructure, as it focuses on improving the reliability and performance of 5G NR communication systems. By analysing real-world RF impairments and evaluating compensation techniques, the study contributes to the development of more robust and scalable digital infrastructure.

It also supports SDG 7: Affordable and Clean Energy by addressing power efficiency in transmitters. Optimization of parameters such as PAPR and mitigation of signal distortions improve power amplifier efficiency, leading to reduced energy consumption in communication networks.

Further, the work contributes to SDG 11: Sustainable Cities and Communities**,** where reliable 5G connectivity is essential for applications such as smart transportation, remote healthcare, and IoT-based systems. Improved signal quality ensures stable and efficient communication in such critical environments.

Overall, by enhancing spectral efficiency, signal quality, and energy utilization, this research supports the development of sustainable and efficient wireless communication systems.

4. PROPOSED SYSTEM

The proposed system is a MATLAB Simulink-based 5G NR transmitter model designed to evaluate the performance of different QAM modulation schemes under realistic conditions. The system integrates baseband signal generation, RF transmission, impairment modelling, and performance evaluation within a unified framework.

It supports 16-QAM, 64-QAM, and 256-QAM modulation and enables analysis across three scenarios: ideal transmission, transmission with RF impairments, and transmission with compensation techniques. Key performance metrics such as Error Vector Magnitude (EVM), Peak-to-Average Power Ratio (PAPR), and constellation characteristics are used for evaluation.

4.1 DESIGN APPROACH

The system is designed using a modular and progressive approach:

- Baseline Model: A standard-compliant 5G NR transmitter is developed with defined numerology parameters such as 30 kHz subcarrier spacing, 5 MHz bandwidth, and 3.5 GHz carrier frequency.
- Modulation Analysis: Performance of 16-QAM, 64-QAM, and 256-QAM is evaluated under ideal conditions to establish a reference.
- Impairment Integration: Practical RF impairments including I/Q imbalance, phase noise, carrier frequency offset, power amplifier nonlinearity, and multipath fading are introduced individually and collectively.

- Compensation Implementation: Suppression techniques such as LMS-based I/Q imbalance compensation and carrier synchronization are applied to mitigate impairment effects.
- Comparative Evaluation: Performance is compared across modulation schemes under identical impaired and compensated conditions to identify optimal operation.

This stepwise approach ensures clear attribution of performance degradation and improvement (Fig. 1).

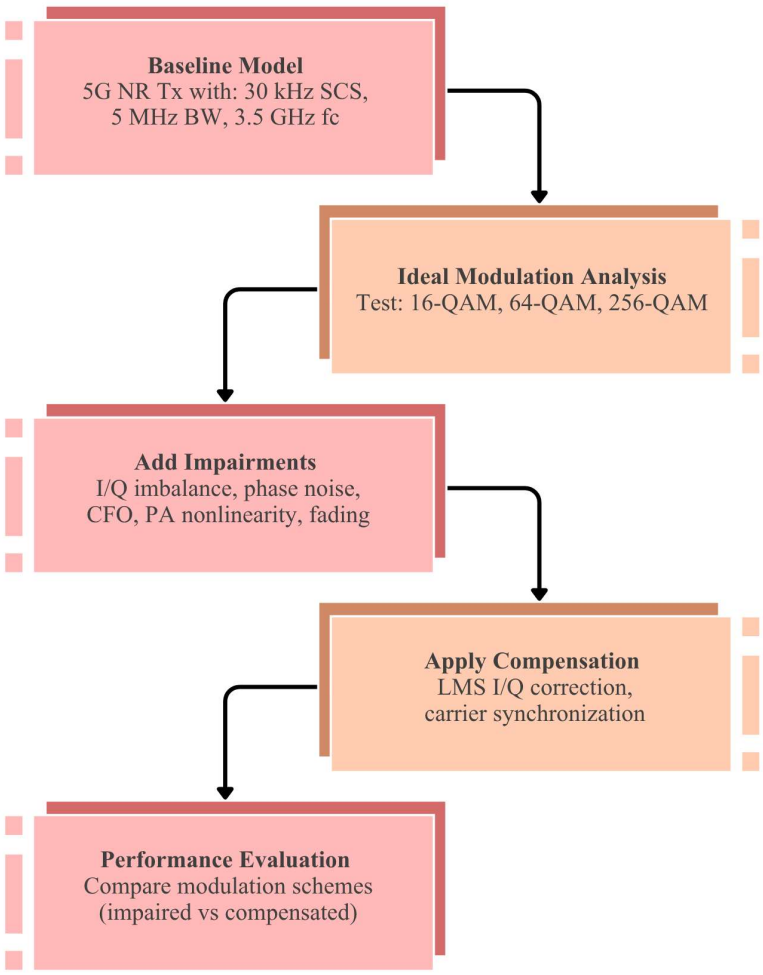

Fig. 1. Design Flow of the Proposed 5G NR Transmitter System

4.3 CODES AND STANDARDS

The proposed system adheres to key 5G NR and simulation standards:

- 3GPP 5G NR Standards: Compliance with FR1 specifications including subcarrier spacing (30 kHz), carrier frequency (3.5 GHz), and bandwidth (5 MHz).

- EVM Requirements: Performance evaluation based on 3GPP-defined EVM thresholds for different QAM schemes.
- Simulation Tools:
    - MATLAB and Simulink for system modelling
    - 5G Toolbox for NR waveform generation
    - Communications Toolbox for EVM, PAPR, and CCDF analysis
    - RF Toolbox for modelling RF impairments and amplifier behaviour
- Signal Processing Standards: Use of adaptive filtering (LMS) and synchronization techniques consistent with modern digital communication systems.

4.4 CONSTRAINTS, ALTERNATIVES AND TRADEOFFS

The proposed system is implemented entirely in a simulation environment, which enables controlled and repeatable analysis but does not capture all hardware-level non-idealities present in real-world deployments. The study is also limited to a fixed configuration with 5 MHz bandwidth and a single carrier frequency, which may not fully represent wider bandwidth or multi-band 5G scenarios. Additionally, even with the inclusion of compensation techniques, residual distortion persists due to the combined effect of multiple RF impairments, highlighting the limitations of practical suppression methods.

To address these limitations, several alternatives can be considered. More advanced compensation techniques such as digital predistortion and machine learning-based correction methods can be employed to improve impairment mitigation. The system can also be extended to incorporate MIMO and beamforming architectures for enhanced performance and realism. Furthermore, hardware-in-the-loop implementation using software-defined radio platforms can provide more accurate validation by bridging the gap between simulation and real-world systems.

The system design also involves key trade-offs. Increasing the modulation order improves spectral efficiency and data rate but reduces robustness to impairments, making higher-order schemes more sensitive to distortion. Similarly, applying advanced compensation techniques enhances signal quality but increases computational complexity and system cost. In addition, improving power amplifier efficiency often comes at the expense of linearity, which can introduce distortion and impact metrics such as PAPR.

These trade-offs must be carefully balanced to achieve optimal performance in practical 5G NR systems.

5. PROJECT DESCRIPTION

5.1 SYSTEM OVERVIEW

The project presents a MATLAB Simulink-based implementation of a 5G NR transmitter designed to evaluate modulation performance under realistic operating conditions. The system integrates baseband signal generation, modulation, RF transmission, impairment modelling, and performance evaluation within a single framework. It supports 16-QAM, 64-QAM, and 256-QAM schemes and enables controlled analysis across different scenarios using metrics such as Error Vector Magnitude (EVM), Peak-to-Average Power Ratio (PAPR), and constellation behaviour (Fig. 2).

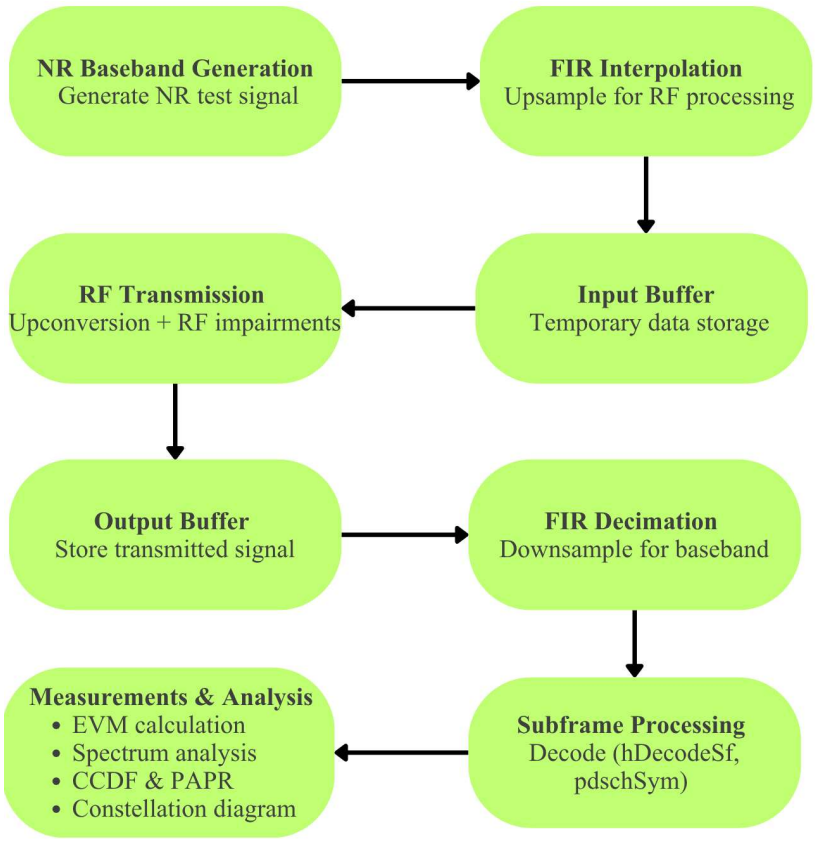

Fig. 2. System-Level Flow of NR RF Transmitter Modelling and Analysis

5.2 IDEAL TRANSMITTER MODEL

The initial stage involves evaluating the transmitter under ideal conditions to establish a performance baseline (Fig. 3). A standard-compliant 5G NR signal is generated using

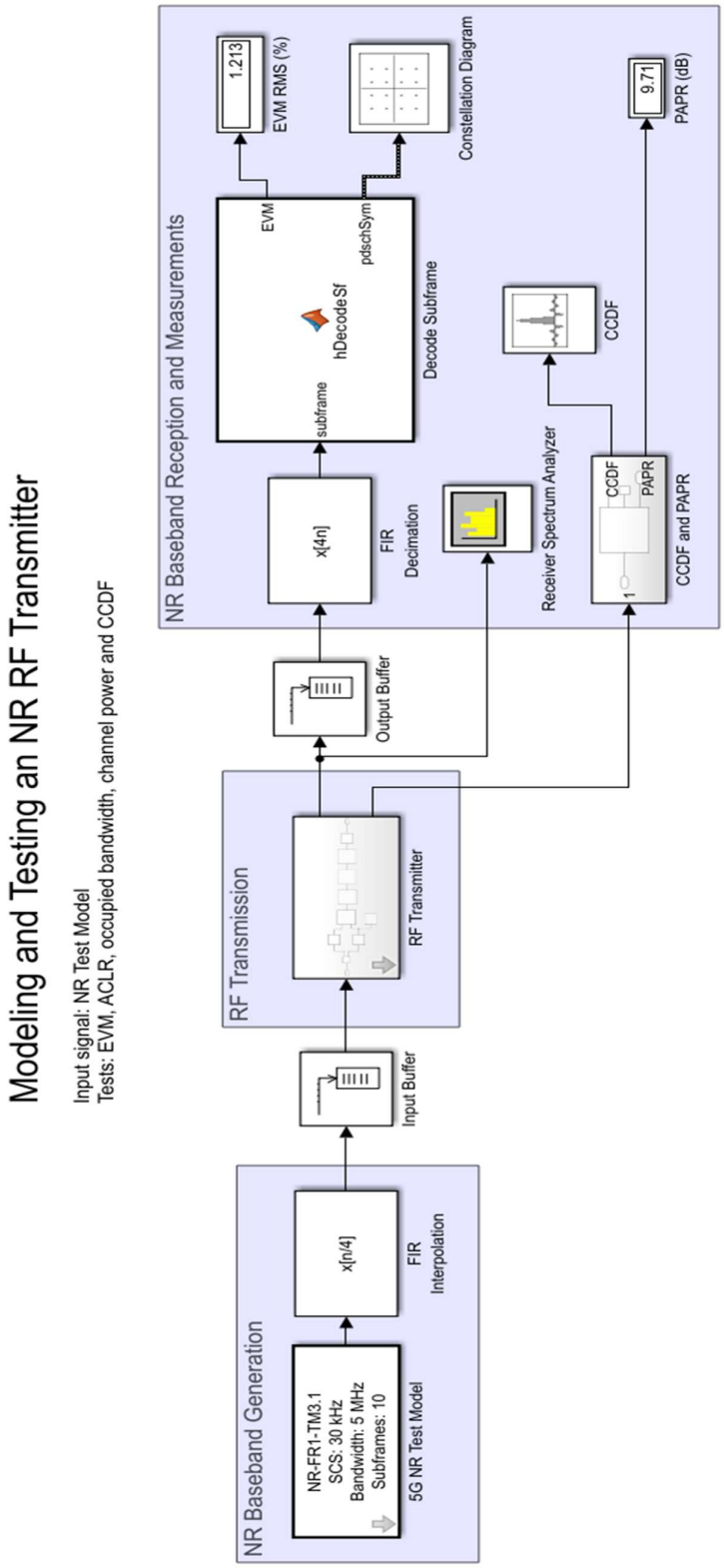

Fig. 3. Base 5G NR Transmitter Model

defined numerology parameters, followed by modulation and RF up-conversion. In this scenario, no impairments are introduced, allowing clear observation of inherent modulation characteristics.

After the baseband generation stage, the signal power is 0.0126 mW (–19 dBm), which increases to about 0.2 mW (–7 dBm) following RF transmission (Fig. 4). This consistent power gain across all modulation schemes indicates stable transmitter gain and uniform RF amplification. Furthermore, the receiver spectrum and CCDF curves exhibit similar power distribution and peak characteristics across all QAM schemes, confirming stable transmitter operation and efficient signal transmission (Fig. 5).

The results indicate that all modulation schemes meet standard performance requirements, exhibiting low EVM and stable PAPR values (Table 1). Constellation diagrams show that 16-QAM offers wider symbol spacing and greater robustness (Fig. 6(a)), whereas 256-QAM provides higher spectral efficiency with densely packed symbols (Fig. 6(c)). 64-QAM achieves a balanced trade-off between robustness and efficiency, making it suitable for further analysis (Fig. 6(b)).

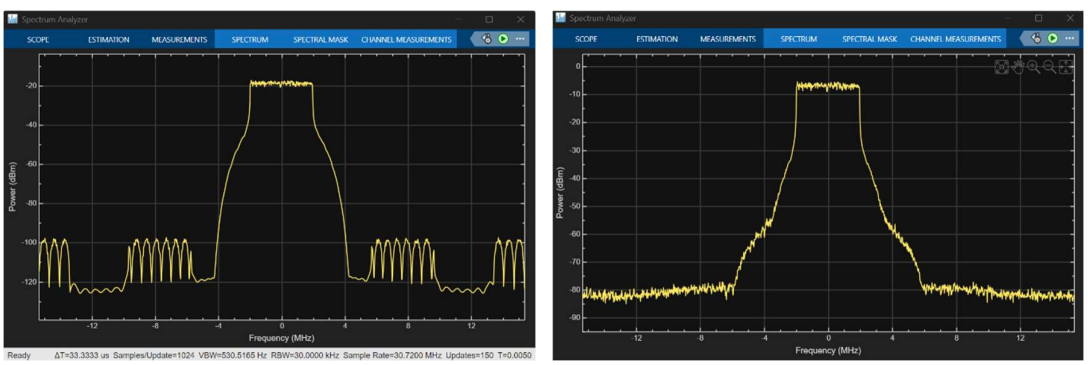

a) Baseband Generation Waveform b) RF Transmission Waveform

Fig. 4. Baseband and RF Transmission Waveforms across all QAM schemes

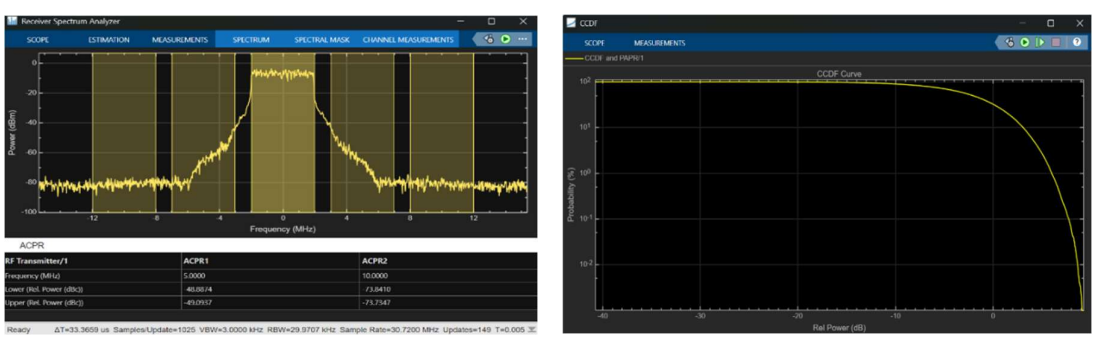

a) Receiver Spectrum b) CCDF Curve

Fig. 5. Receiver Spectrum and CCDF Curve across all QAM schemes

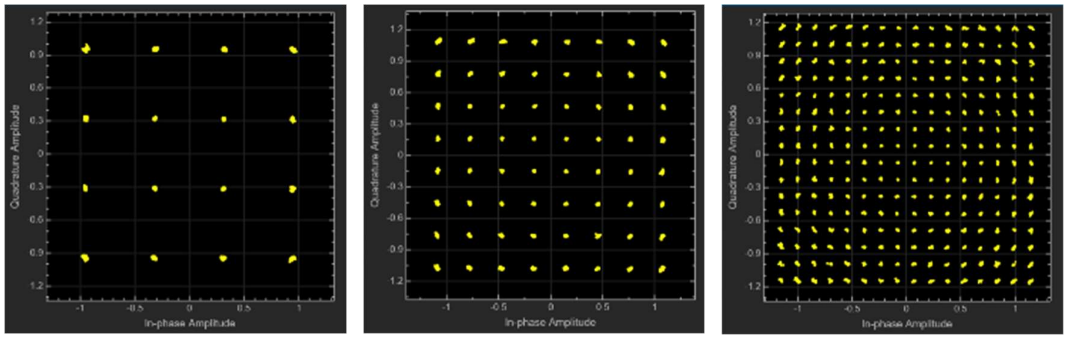

(a) 16-QAM (b) 64-QAM (c) 256-QAM

Fig. 6. Ideal constellation diagrams for 16-QAM, 64-QAM, and 256-QAM

TABLE 1 QAM PERFORMANCE COMPARISON FOR IDEAL CASE

Modulation	**Obtained EVM (%)**	**3GPP Threshold EVM (%)**	**Obtained PAPR (dB)**	**3GPP Threshold PAPR (dB)**
16-QAM	1.213	≤ 12.5	9.71	≤ 10
64-QAM	1.243	≤ 8	9.808	≤ 10
256-QAM	1.219	≤ 3.5	9.577	≤ 10

5.3 IMPAIRMENT-AWARE TRANSMITTER MODEL

To reflect practical transmitter conditions, RF impairments are introduced into the system (Fig. 7). These include phase noise, carrier frequency offset, I/Q imbalance, power amplifier nonlinearity, and channel effects such as Rayleigh and Rician fading along with AWGN. Each impairment is first analysed individually to understand its specific impact on signal quality, followed by combined evaluation to simulate real-world conditions.

The analysis shows that impairments significantly distort the signal (Table 2), leading to increased EVM and degraded constellation clarity. Among the impairments, carrier frequency offset and oscillator-related effects have the most severe impact, while channel noise contributes comparatively less to overall degradation. Higher-order modulation schemes are observed to be more sensitive to these effects.

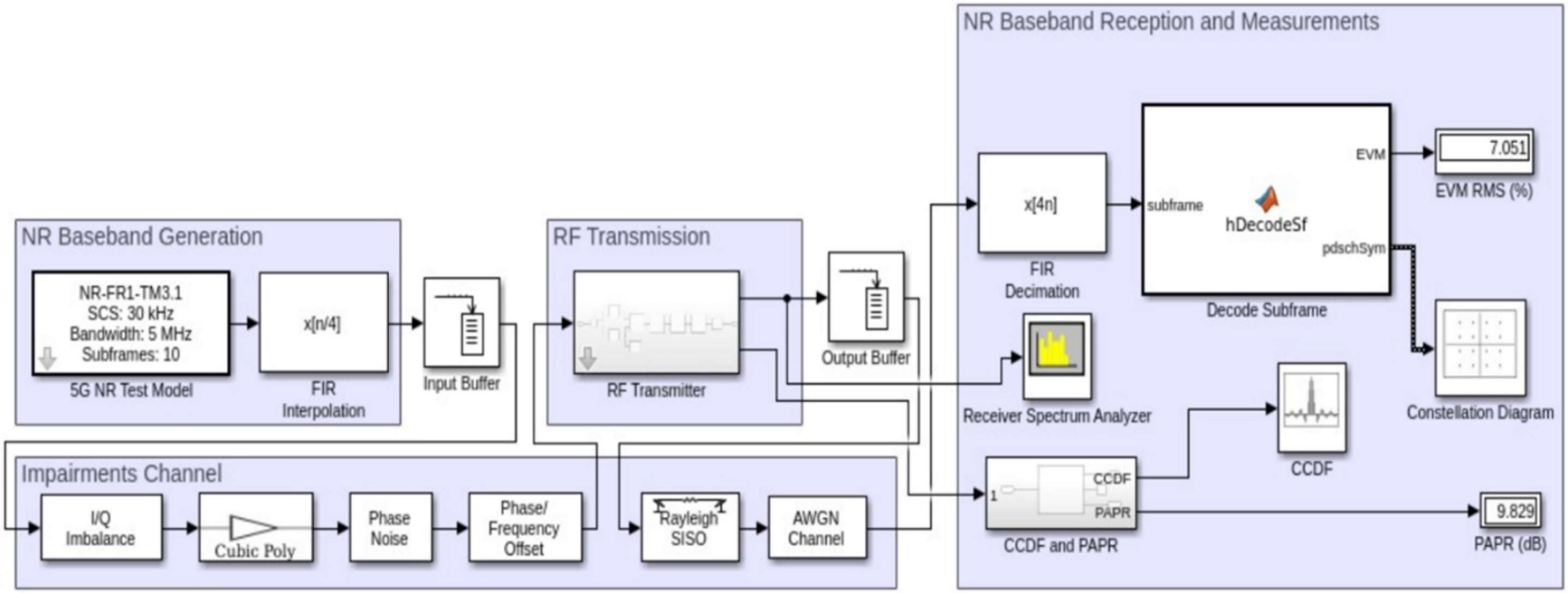

Fig. 7. 5G NR Transmitter Block with Impairments Blocks

TABLE 2 MAJOR RF IMPAIRMENTS ON 64-QAM

Impairment	EVM Range	PAPR	Severity
Phase Noise	1.8 – 2.57 %	~9.83 dB	Medium
Carrier Frequency Offset	2.4 – 1168 %	~9.84 dB	High
I/Q Imbalance	3.9 – 6.4 %	~9.83 dB	Medium
PA Nonlinearity	1.2 – 1.8 %	~9.5 dB	Low
Rayleigh Fading	1.2 – 1.6 %	~9.7 dB	Low
AWGN	1.26 – 1.29 %	~9.8 dB	Low

5.4 TRANSMITTER WITH SUPPRESSION AND COMPENSATION

To mitigate the effects of RF impairments, compensation techniques are integrated into the transmitter model (Fig. 8). The modified architecture incorporates impairment-aware processing blocks alongside suppression mechanisms. An LMS-based I/Q imbalance compensator is employed to correct amplitude and phase mismatches between the in-phase and quadrature components, while a carrier synchronizer is used to mitigate frequency and phase offsets introduced by carrier frequency offset and phase noise.

The inclusion of these compensation blocks results in a noticeable improvement in signal quality, as reflected in the reduction of EVM and improved stability of constellation patterns (Table 3). Among the techniques, I/Q imbalance compensation shows moderate improvement, whereas correction of combined impairments such as phase noise and CFO yields limited gains due to their complex and dynamic nature.

Despite these enhancements, complete restoration to ideal performance is not achieved. This is primarily due to the cumulative and interacting effects of multiple RF impairments, which introduce residual distortion that cannot be fully eliminated using conventional compensation methods.

TABLE 3 EFFECT OF SUPPRESSION / COMPENSATION (64-QAM)

Scenario	EVM w/o Suppression	EVM with Suppression	Improvement
Phase Noise + CFO	6.750 %	6.669 %	Limited
I/Q Imbalance	6.447 %	4.751 %	Moderate
All Impairments	7.051 %	6.698 %	Marginal

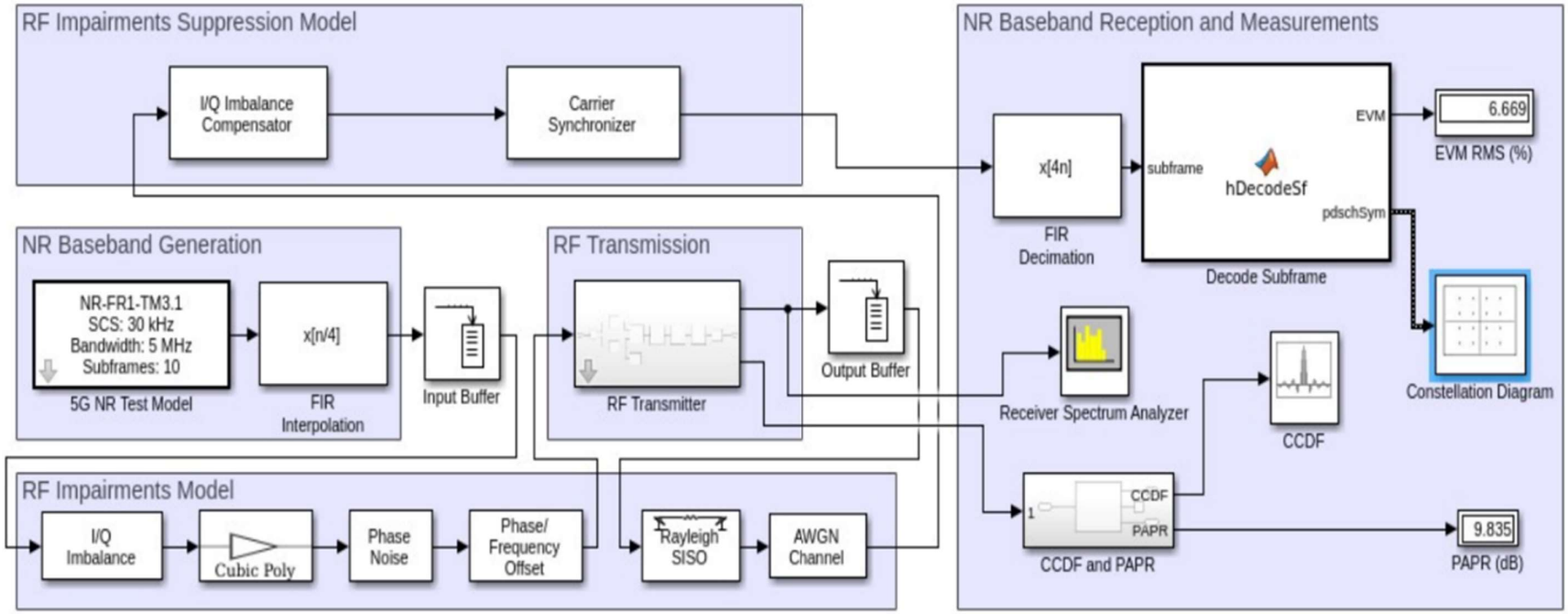

Fig. 8. 5G NR Transmitter Block with Impairments and Suppression Blocks

5.5 COMPARATIVE MODULATION ANALYSIS

A comparative evaluation is carried out across all modulation schemes under identical impaired and compensated conditions (Table 4). The results indicate that 16-QAM maintains strong robustness to noise and distortion, as reflected by relatively well-defined constellation points; however, this comes at the expense of lower spectral efficiency (Fig. 9(a)). In contrast, 256-QAM achieves higher data rates but exhibits significant sensitivity to impairments, leading to severe constellation dispersion and reduced reliability under practical conditions (Fig. 9(c)).

64-QAM demonstrates the most balanced performance, with manageable distortion levels and reasonably compact constellation clustering, indicating an effective trade-off between robustness and spectral efficiency. Consequently, 64-QAM emerges as the most practical modulation scheme for 5G NR systems operating under realistic RF impairment conditions (Fig. 9(b)).

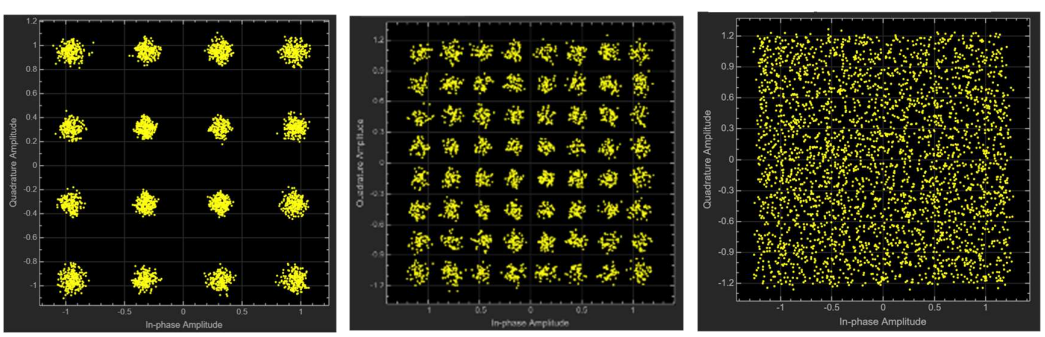

(a) 16-QAM (b) 64-QAM (c) 256-QAM

Fig. 9. Constellation diagrams of 16-QAM, 64-QAM, and 256-QAM after applying suppression and compensation in the 5G NR transmitter model.

TABLE 4 COMPARATIVE MODULATION PERFORMANCE

Modulation	EVM Range	PAPR (dB)	Practicality
16-QAM	~6.9 %	~10.1	Robust, inefficient
64-QAM	~6.7 %	~9.8	Optimal
256-QAM	~5.9 %	~9.8	Highly Sensitive

6. HARDWARE / SOFTWARE TOOLS USED

The system is implemented using a software-based simulation environment, enabling flexible design, controlled experimentation, and repeatable performance analysis of the 5G NR transmitter model.

On the software side, MATLAB and Simulink serve as the primary development platforms, providing capabilities for signal processing, system-level modelling, and visualization of results. Specialized toolboxes are utilized for waveform generation, RF impairment modelling, and performance evaluation, allowing accurate representation of practical transmitter behaviour.

From a hardware perspective, the implementation does not require dedicated RF equipment and is executed on a standard computing system. A system with a multi-core processor, sufficient RAM, and adequate storage is used to handle simulation complexity efficiently. This setup ensures accessibility while maintaining reliable analysis without dependence on physical hardware.

7. SCHEDULE AND MILESTONES

The project was carried out over two semesters in a structured and progressive manner. During the first phase, the initial four weeks focused on problem identification and literature review, followed by methodology development and system design in weeks five to eight, including selection of modulation schemes and performance metrics. The implementation phase from weeks nine to twelve involved building and simulating the transmitter model under ideal and AWGN conditions with basic suppression techniques. The final four weeks were dedicated to result analysis, validation with standard thresholds, and preparation of the report and presentation.

In the second phase, the first six weeks focused on simulation of individual RF impairments and validation through comparison with existing literature, along with systematic documentation. The following four weeks involved simulation of combined impairments, comparative analysis of Rayleigh and Rician channels, and integration of suppression and compensation techniques. The phase concluded with result consolidation, documentation, and formatting for IEEE conference submission.

8. RESULT ANALYSIS

The simulation results demonstrate that the developed 5G NR transmitter model performs reliably under both ideal and practical conditions, with clear insights into modulation behaviour and impairment effects. Under ideal conditions, all three modulation schemes exhibit stable and consistent performance. The transmitter shows uniform signal amplification, with power increasing from approximately 0.0126 mW (–19 dBm) at the baseband stage to 0.2 mW (–7 dBm) at the RF output, confirming linear gain and efficient transmission. Spectral and CCDF analyses further indicate consistent power distribution and stable transmitter efficiency across all modulation schemes.

Performance metrics such as Error Vector Magnitude (EVM) and Peak-to-Average Power Ratio (PAPR) remain well within 3GPP-defined thresholds for all cases, with average values around 1.2% and 9.7 dB respectively, indicating minimal distortion and high signal quality. Among the modulation schemes, 16-QAM shows strong robustness due to wider symbol spacing, while 256-QAM achieves higher spectral efficiency but with increased sensitivity. 64-QAM provides a balanced performance, combining acceptable robustness with higher data rates.

When RF impairments are introduced, a noticeable degradation in signal quality is observed. Impairments such as carrier frequency offset, phase noise, and I/Q imbalance significantly distort the constellation and increase EVM, with carrier frequency offset emerging as the most dominant factor. In contrast, channel effects such as Rayleigh fading and AWGN contribute relatively minor degradation, indicating that RF front-end non-idealities have a greater impact on system performance.

The inclusion of suppression and compensation techniques results in measurable improvements in signal quality. Reduction in EVM and stabilization of constellation patterns confirm the effectiveness of techniques such as I/Q imbalance compensation and carrier synchronization. However, the results also highlight that complete recovery to ideal conditions is not achievable, as residual distortion persists due to the combined effect of multiple impairments.

A comparative evaluation across modulation schemes under impaired and compensated conditions shows that 16-QAM remains highly robust but inefficient in terms of spectral

usage, while 256-QAM is highly sensitive and less reliable in practical scenarios. It is also observed that under these conditions, only 64-QAM is able to satisfy the 3GPP-defined EVM performance thresholds, whereas higher-order modulation fails to meet the required limits due to increased sensitivity to impairments. 64-QAM consistently demonstrates the most favourable trade-off between robustness, efficiency, and implementation feasibility, making it the most suitable modulation scheme for practical 5G NR transmitter systems.

9. CONCLUSION

9.1 OBTAINED RESULTS

The results demonstrate that all modulation schemes perform well under ideal conditions, satisfying 3GPP EVM and PAPR requirements. However, the introduction of RF impairments significantly degrades system performance, with carrier frequency offset and oscillator-related effects identified as the most dominant sources of distortion. Channel effects such as AWGN and multipath fading have a comparatively lower impact.

The application of suppression and compensation techniques, including LMS-based I/Q imbalance correction and carrier synchronization, improves signal quality and reduces EVM, although residual distortion persists due to the combined effect of multiple impairments.

A comparative analysis shows that 16-QAM is highly tolerant to noise and distortion impairments, providing strong robustness but lower spectral efficiency, making it less suitable for high data rate applications. In contrast, 256-QAM offers higher spectral efficiency but is highly sensitive to impairments, resulting in reduced reliability. 64-QAM achieves the best trade-off between robustness and efficiency and is the only scheme that consistently satisfies 3GPP EVM requirements under practical conditions, making it the most suitable modulation scheme.

9.2 FUTURE WORK

The present work can be extended by incorporating more advanced impairment mitigation techniques to further improve system performance under realistic conditions. Techniques such as digital predistortion (DPD) and machine learning-based compensation

methods can be explored to enhance the suppression of nonlinearities and combined RF impairments.

The system can also be expanded to include advanced 5G features such as Multiple Input Multiple Output (MIMO) and beamforming, enabling more realistic evaluation of modern wireless communication scenarios. Additionally, extending the analysis to wider bandwidths, multiple carrier frequencies, and higher frequency bands (e.g., mmWave) would provide deeper insights into next-generation communication systems.

Further validation of the model can be achieved through hardware-in-the-loop implementation using software-defined radio (SDR) platforms, bridging the gap between simulation and real-world deployment. Finally, future work can focus on optimizing the trade-off between spectral efficiency, power efficiency, and system complexity to design more robust and energy-efficient 5G NR transmitter systems.

9.3 INDIVIDUAL CONTRIBUTION

This work was carried out by Prarthna Puhan under the guidance of Dr. Shambavi K. The contributions include an in-depth literature review, systematic system design, and development of a 5G NR transmitter model using MATLAB Simulink. The work further involves the modelling and integration of key RF impairments, implementation of compensation techniques, and comprehensive performance evaluation using standard metrics. Detailed analysis and interpretation of results were performed to derive meaningful insights, followed by complete documentation and preparation of the research for academic dissemination.

10. SOCIAL AND ENVIRONMENTAL IMPACT

The proposed work contributes to improving the reliability and efficiency of modern wireless communication systems, which are essential for digital connectivity in areas such as healthcare, education, and smart infrastructure. By enhancing signal quality and ensuring stable communication under practical conditions, the system supports applications like remote healthcare, real-time monitoring, and smart city services, thereby improving accessibility and quality of life.

From an environmental perspective, the study promotes efficient utilization of power and spectrum resources. Optimization of transmitter performance and reduction of signal distortion contribute to better power amplifier efficiency, leading to lower energy consumption in communication networks. Additionally, selecting appropriate modulation schemes such as 64-QAM helps achieve a balance between performance and resource usage, minimizing unnecessary energy and bandwidth wastage.

Overall, the work supports the development of sustainable and efficient communication systems by enabling reliable connectivity while reducing resource consumption and environmental impact.

11. COST ANALYSIS

The project incurred no monetary cost**,** as it was conducted entirely using software tools available through student academic licenses**.** MATLAB and Simulink, along with the 5G, Communications, and RF Toolboxes, were accessed using freely available student or academic versions. No additional hardware components or paid resources were required.

Since all simulations, waveform generation, and analyses were performed on software platforms, the project achieved zero implementation cost while maintaining high accuracy and professional research standards.

12. PROJECT OUTCOME / PUBLICATION / PATENT

The project resulted in the successful development and validation of a 5G NR transmitter model capable of analysing modulation performance under realistic RF impairment conditions. The study provides clear insights into the impact of impairments and the effectiveness of compensation techniques, establishing 64-QAM as the most practical modulation scheme.

The research work, submitted on March 2, 2026, has been accepted for publication on April 16, 2026, at ICIRCA 2026 – the 7th International Conference on Inventive Research in Computing Applications, Coimbatore, India.

REFERENCES

[1] T. S. Rappaport et al., "Wireless communications and applications above 100 GHz: Opportunities and challenges for 6G and beyond," IEEE Access, vol. 7, pp. 78729–78757, 2019, doi: 10.1109/ACCESS.2019.2921522.

[2] Goldsmith, *Wireless Communications*. Cambridge, U.K.: Cambridge Univ. Press, 2005.

[3] F. Molisch, *Wireless Communications*, 2nd ed. Hoboken, NJ, USA: Wiley, 2011.

[4] J. G. Proakis and M. Salehi, *Digital Communications*, 5th ed. New York, NY, USA: McGraw-Hill, 2008.

[5] S. Parthasarathy et al., "Error vector magnitude analysis in generalized fading with co-channel interference," IEEE Trans. Commun., vol. 65, no. 12, pp. 5377–5391, Dec. 2017.

[6] Tarighat, R. Bagheri, and A. H. Sayed, "Compensation schemes and performance analysis of IQ imbalances in OFDM receivers," IEEE Trans. Signal Process., vol. 53, no. 8, pp. 3257–3268, Aug. 2005.

[7] Q. Zou, A. Tarighat, and A. H. Sayed, "Joint compensation of IQ imbalance and phase noise in OFDM wireless systems," IEEE Trans. Commun., vol. 57, no. 2, pp. 404–414, Feb. 2009.

[8] Jovanović and S. Milenković, "Transmitter IQ imbalance mitigation and PA linearization in software defined radios," Radioengineering, vol. 31, no. 1, pp. 144–154, Apr. 2022.

[9] S. Cripps, *RF Power Amplifiers for Wireless Communications*, 2nd ed. Norwood, MA, USA: Artech House, 2006.

[10] Demir, "Phase noise and timing jitter in oscillators with colored-noise sources," IEEE Trans. Circuits Syst. I, vol. 49, no. 12, pp. 1782–1791, Dec. 2002.

[11] Georgiadis and C. Kalialakis, "Evaluation of error vector magnitude due to combined IQ imbalances and phase noise," IET Circuits, Devices & Systems, vol. 8, no. 6, pp. 441–448, 2014.

[12] Pyatin et al., "Radio frequency interface quality assessment in 4G/5G: Effects of IQ imbalance, phase noise, and nonlinearities on error vector magnitude," IEEE Access, vol. 11, pp. 1–15, 2023.

[13] O. Omijeh and E. E. Ibara, "Modeling and simulation of phase noise effect on 256-QAM," Int. J. Wireless Commun. Mobile Comput., vol. 3, no. 6, pp. 72–76, 2015.

[14] Halder et al., "MATLAB Simulink study on the performance of QAM modulation in AWGN, Rayleigh, and Rician fading channels: BER analysis," Irish Interdisciplinary J. Sci. & Res., vol. 7, no. 2, pp. 34–41, 2023.

[15] M. Valkama, M. Renfors, and V. Koivunen, "Advanced methods for I/Q imbalance compensation in communication receivers," IEEE Trans. Signal Process., vol. 49, no. 10, pp. 2335–2344, Oct. 2001.

[16] P. Song et al., "Blind estimation algorithms for I/Q imbalance in direct down-conversion receivers," in Proc. IEEE VTC-Fall, 2018.

[17] Q. Zou, A. Tarighat, and A. H. Sayed, "Joint compensation of IQ imbalance and phase noise in OFDM systems," in Proc. Asilomar Conf., 2006.

[18] Tandur and M. Moonen, "Efficient compensation of transmitter and receiver IQ imbalance in OFDM systems," EURASIP J. Adv. Signal Process., 2010.

[19] Morgan et al., "A generalized memory polynomial model for digital predistortion of RF power amplifiers," IEEE Trans. Signal Process., vol. 54, no. 10, pp. 3852–3860, Oct. 2006.

[20] G. Somasundaram et al., "Effective digital predistortion (DPD) on a broadband millimeter-wave GaN power amplifier using LTE 64-QAM waveforms," Electronics, vol. 12, no. 13, Art. no. 2869, 2023.

[21] Leshem and M. Yemini, "Phase noise compensation for OFDM systems," IEEE Trans. Signal Process., vol. 65, no. 21, pp. 5675–5688, Nov. 2017.

[22] H. Mehrpouyan et al., "Joint estimation of channel and oscillator phase noise in MIMO systems," IEEE Trans. Signal Process., vol. 60, no. 9, pp. 4790–4807, Sep. 2012.

[23] Nasir et al., "Timing and carrier synchronization in wireless communication systems," EURASIP J. Wireless Commun. Netw., 2016.